Spritzgiessautomaten

Innovative into the Future – BOY-Injectioneering

Insert moulding machine BOY 60 E VV

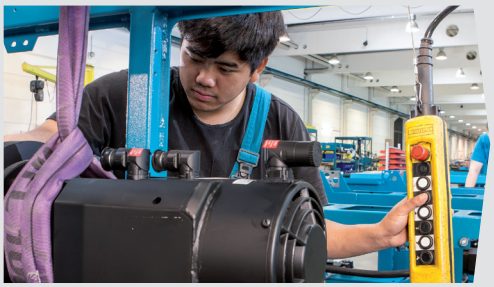

“Heart” of the insert moulding machine: The efficient servo-motor pump drive

Six-axis articulated robot integrated space-saving on the machine table

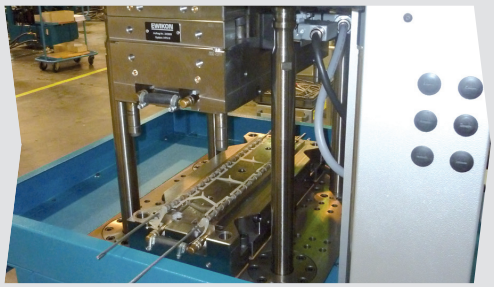

“Collar” around the fixed platen for endless production of distance pieces

- Largest, four-tie bar insert moulding machine
- Ergonomically favourable table height of 975 mm
- **Optimum accessibility** to the mould area from all four sides
- Favourable machine hour rates
- Energy-efficient **servo-motor pump drive**
- Optionally with high wear-resistant and energy-efficient **EconPlast** technology

With the development of the BOY 60 E VV insert moulding machine, BOY tops off its machine programme with a universal insert moulding machine. Compact dimensions and ample space on the machine frame for peripheral and optional equipment ensure optimum integration possibilities for automation systems.

Generous distances between tie bars furthermore offer enough space for mounting large and multi-cavity moulds. Large-volume insert mouldings with total seven different screw diameters are therefore possible without any problems.

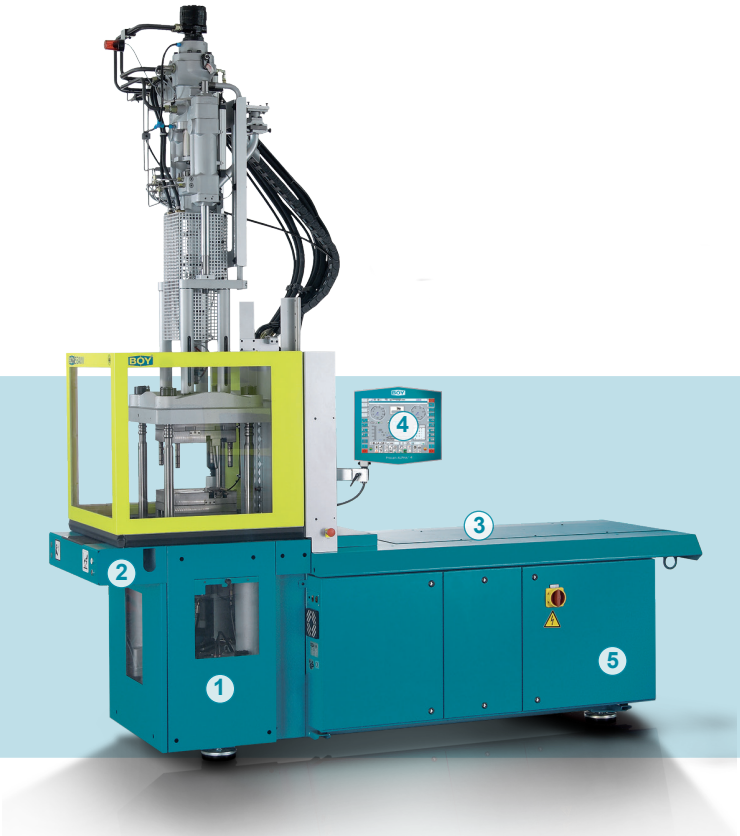

1. The machine design features the best ergonomics and efficient operation.
2. The fixed lower platen is characteristic for all BOY insert moulding machines.
3. Free machine table for integration of automation equipment. (higher injection speed)
4. Optimum control technology with intuitive operation concept.
5. Robust machine design with integrated oil tank.

All dimensions in mm

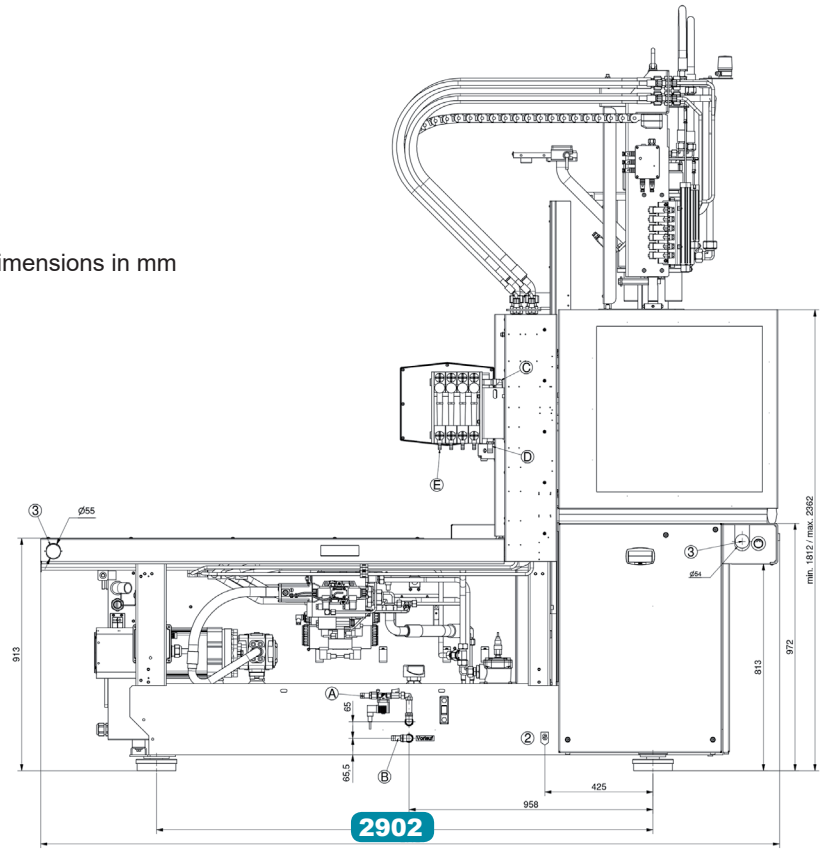

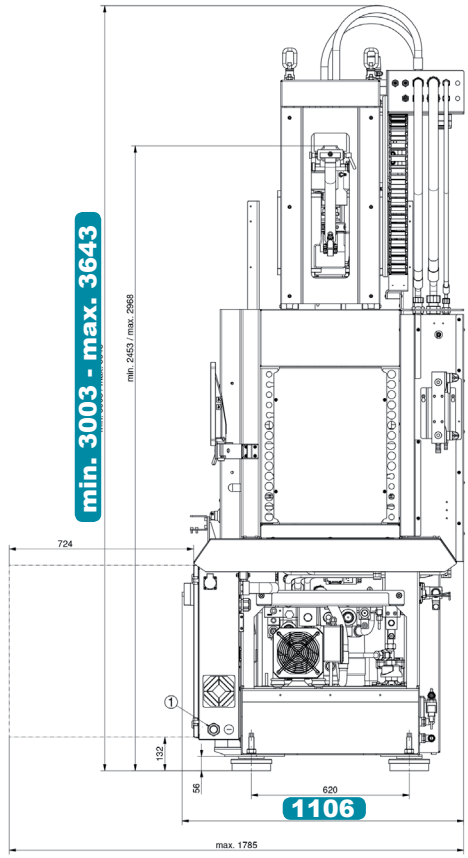

Technical Data – standard version[1)]

Injection unit for processing thermoplastics		unit 215 (Standard)			
Screw diameter	mm / inch	28 / 1.1	32 / 1.25	38 / 1.5	42 / 1.65
Screw- L/D-ratio		22.7	20	16.7	15
Max. stroke volume (theoretical)	in^3	4.69	6.13	8.66	10.57
Max. shot weight in PS (theoretical)	oz	2.47	3.23	4.55	5.56
Injection force	US Tons	18.92	18.92	18.92	18.92
Injection flow (theoretical)	oz/s	2.97	3.88	5.47	6.67
Max. spec. injection pressure	psi	40,581	31,068	22,032	18,043
Max. screw stroke	mm / inch	125 / 4.92	125 / 4.92	125 / 4.92	125 / 4.92
Nozzle force / contact pressure	US Tons	7.26	7.26	7.26	7.26
Nozzle retraction stroke	mm / inch	215 / 8.46	215 / 8.46	215 / 8.46	215 / 8.46
Screw torque	ft / lbf	287.6[1] / 361.4[2]	287.6[1] / 361.4[2]	287.6[1] / 361.4[2]	287.6[1] / 361.4[2]
Screw speed (infinitely variable)	rpm	325[2] / 410[1]	325[2] / 410[1]	325[2] / 410[1]	325[2] / 410[1]
Screw pulback force	US Tons	3.27	3.27	3.27	3.27
Heating power (nozzle + cylinder)	W	7700	7700	7700	7700
Hopper capacity	US gal.	-	-	-	-
Clamping unit					
Clamping force	US Tons	66	66	66	66
Distance between tie bars	inch (h x v)	14.17 x 13.19	14.17 x 13.19	14.17 x 13.19	14.17 x 13.19
Max. daylight between platen	mm / inch	550 / 21.65[4]	550 / 21.65[4]	550 / 21.65[4]	550 / 21.65[4]
Max. opening stroke (adjustable)	mm / inch	300 / 11.81	300 / 11.81	300 / 11.81	300 / 11.81
Min. mould height	mm / inch	250 / 9.84[4]	250 / 9.84[4]	250 / 9.84[4]	250 / 9.84[4]
Max. mould weight on moveable clamping side	lb	882	882	882	882
Mould opening force	US Tons	4.18	4.18	4.18	4.18
Mould closing force	US Tons	2.68	2.68	2.68	2.68
Ejector stroke (max.)	mm / inch	80 / 3.15 (130 / 5.12)	80 / 3.15 (130 / 5.12)	80 / 3.15 (130 / 5.12)	80 / 3.15 (130 / 5.12)
Ejector force pushing / pulling	US Tons	2.24 / 1.48	2.24 / 1.48	2.24 / 1.48	2.24 / 1.48
General					
Installed driving power / total power	kW	11 / 18.7 (400 V)	11 / 18.7 (400 V)	11 / 18.7 (400 V)	11 / 18.7 (400 V)
Duration of the dry cycle (EUROMAP 6)	s – mm	1.9 – 252	1.9 – 252	1.9 – 252	1.9 – 252
Hydraulic system pressure	psi	2829	2829	2829	2829
Oil tank capacity	US gal.	52.8	52.8	52.8	52.8
Dimensiones and weights					
Dimensions (LxWxH) / Footprint	inch / in^2	114.3 x 43.5 x 118.2[3] / 4972			
Total weight net (without oil)	lb	5555			
Total weight gross (pallet & foil / wooden case)	lb	5776 / 6481			
Transport dimensions / case (LxWxH) approx.	inch	122.0 x 53.1 x 98.4 / 122.0 x 53.1 x 88.6			

1) hydraulic motor with a pump volume of 162 cm^3 2) hydraulic motor with a pump volume of 204 cm^3 3) max. 135.3 inch 4) optional 3.94 inch larger


Servo–Drive

Procan ALPHA®

Technology

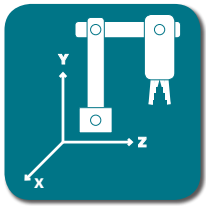

Automation

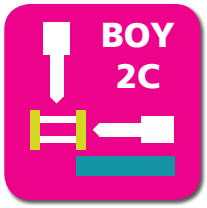

Multi Component

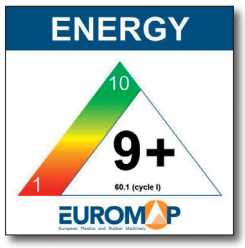

The specified efficiency classification is achievable depending on the respective machine equipment.

Equipment

Injection unit	
Pivoting injection unit	–
Preset screw speed values with ramping transition	■
Cold start protection	■
Number of set points of injection speed	8
Number of set points of injection pressure	2
Start of holding pressure dependent on hydraulic pressure, stroke and time	■
Start of holding pressure, cavity pressure-dependent	□
Number of set points of holding pressure	8
Production monitoring at start of holding pressure	■
Closed loop control for the complete injection profile and back pressure	■
Control for intrusion-injection	■
PID microprocessor-controlled heating zones for cylinder + nozzle set and temp. display	5
Hydraulically actuated needle shut-off nozzle (pneumatic for XS-LSR)	○
Trichterschnellentleerung (25 / 35 / 60 VV / 35 HV / 2C M ohne Materialtrichter)	■
Automatic material loader / feeder	□
Adjustable nozzle force	■
Delayed nozzle retraction	■
Servo-electric screw drive (separate feed line required)	○
High wear-resistant plasticizing units	○
High wear-resistant EconPlast unit	○
Speed injection	–

Electronics	
USB interface for access and data exchange	■
Interface kit: Serial/Temperature device, USB/Printer and Ethernet	□
OPC interface	□
4 freely programmable inputs/outputs	□
Piece counter	■
Preselect cycle counter with auto shut-off	■
Grounded socket outlet 230 V ~ / 10 A (alternatively can be switched off)	■(□)
CEE socket outlet 400 V ~ / 16 A (alternatively can be switched off)	– (–)
Socket distributor 400 V ~ / 230 V ~ switched (separate feed line required)	–
Energy distributor with four fixed connections, up to 5 x 400 V CEE + 3 x 230 V (sockets can be switched off optionally). Standard supply 125 A / 5 x 50 mm²	–
Switch cabinet ventilation	■
Standardized interface for handling units (EUROMAP 67)	□
Separate feeder (heating and motor current)	○
7-day timer	■
Additional temperature control	□
Brush control	□
Connector for safety switch to inhibit mould closing	□
Integrated hot runner control, 8/16-fold (separate feed line required)	□
Air conditioning unit for control cabinet	□
Alarm signal with sound	□

Clamping unit	
Reduced mould height by 50 mm	□
Moving platen support to improve the precision when using large moulds	–
Number of set points of mould closing speed / opening speed	8/8
Number of reopening attempts after mould closing	■
Hydr. ejector with dig. adjustable pressure, speed, position + no. of strokes, intermediate stop position	■
Hydraulic ejector with adjustable stroke 80 mm	■
Hydraulic ejector with adjustable stroke 130 mm	–
Hydraulic ejector with adjustable stroke 150 mm and 42,7 kN force	–
Hydraulic unscrewing device, one or two directions of rotation with intermediate stop	–
Hydraulic unscrewing device, two directions, proportional valve and pulse generator	–
Core pull control with 4/3 way directional control valve and freely selectable operational programmes	□
Injection compression (coining) and breathing with mould degassing control	□
Hydraulic guard safety device	■
Self adjusting mechanical drop bar safety system with electronic monitor	■
Safety gate for handling devices	–
Electronically operated safety gate	–
Selection flap	–
Air ejection	□
Mould lifting crane	–
Simultaneous ejector movement (with double pump)	–
Integrated sprue picker	–

Hydraulics	
Electronically controlled variable pump	–
Servo-motor pump drive (Servo-drive)	■
Oil preheating circuit automatic	■
Oil temperatur gauge / Controlled oil cooling / Oil level indicator	■
Oil level and temperature monitoring	■
Optical oil filter contamination indicator	–
Proportional action valve for the clamping unit	–
Proportional valve with stroke feedback and positioning action for clamp unit	■

General	
Cooling water distributor with electric shut-off valve for injection mould	○
Temperature control for feed throat	□
6- / 8-zone water distributor	○
Tool kit	■
Spare parts package	□
Oil filling	□
Anti-vibration mounts	■

■ standard ○ alternatively □ optional – not available

A 000193

A 01/23

You would like to learn more about this BOY injection moulding machine?


Data and Equipment (complete overview)


Competence brochure

BOY®
Spritzgiessautomaten

Boy Machines, Inc.
199 Philips Road
Exton, Pennsylvania 19341

Phone: (610) 363-9121
Fax: (610) 363-0163
sales@boymachines.com
www.boymachines.com

BOY-APP
free of charge at
http://app.dr-boy.de